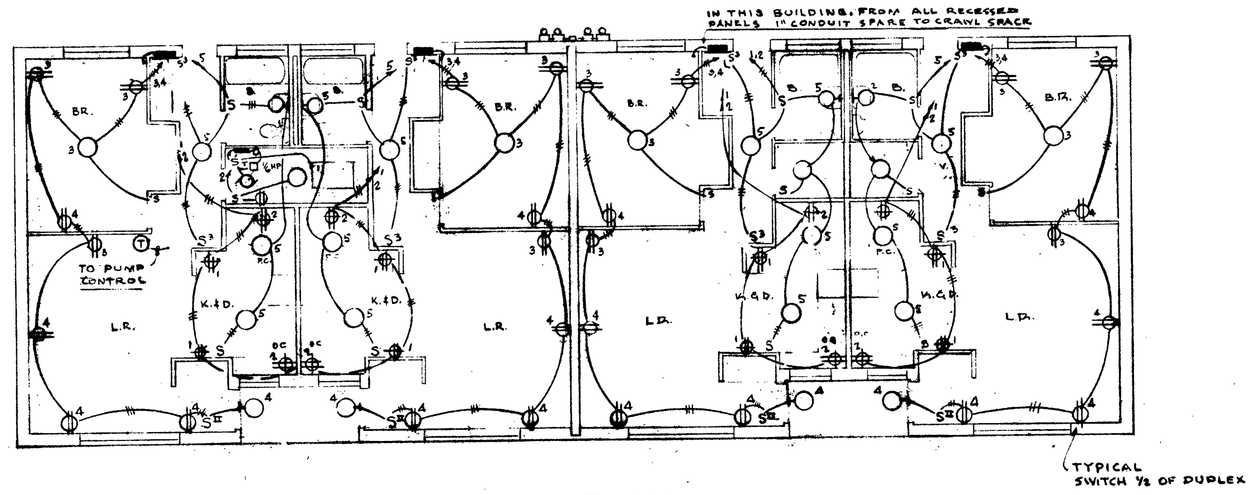

FIRST FLOOR PLAN

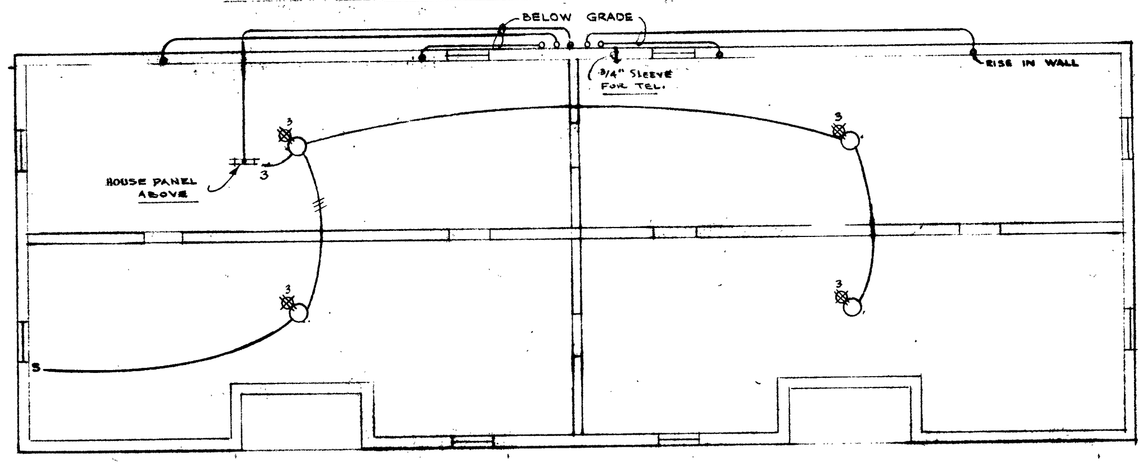

CRAWL SPACE PLAN SCALE 1/8" = 1'-0"

1 BEDROOM UNIT

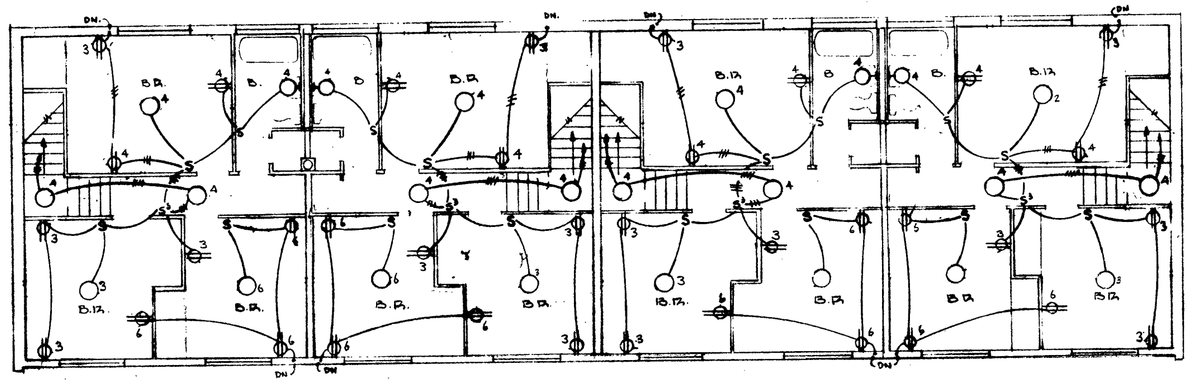

SECOND FLOOR PLAN

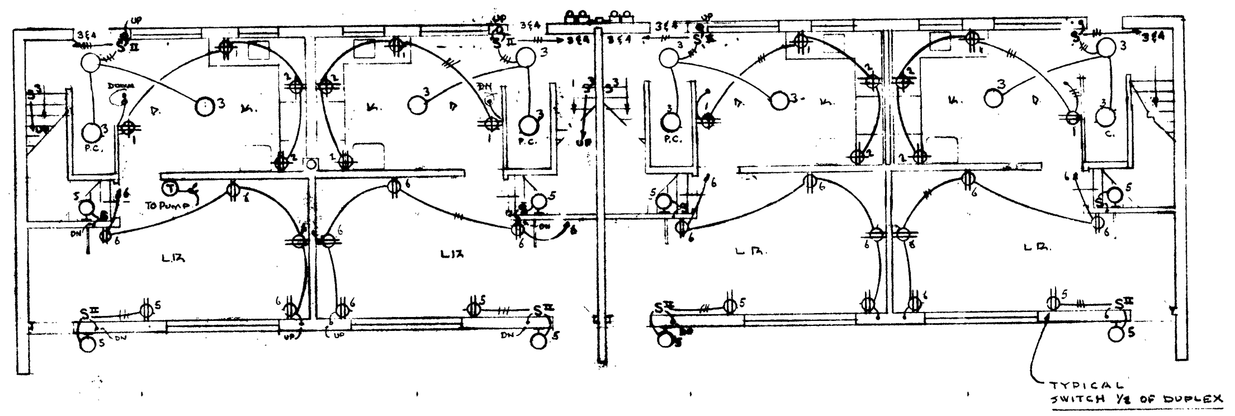

FIRST FLOOR PLAN

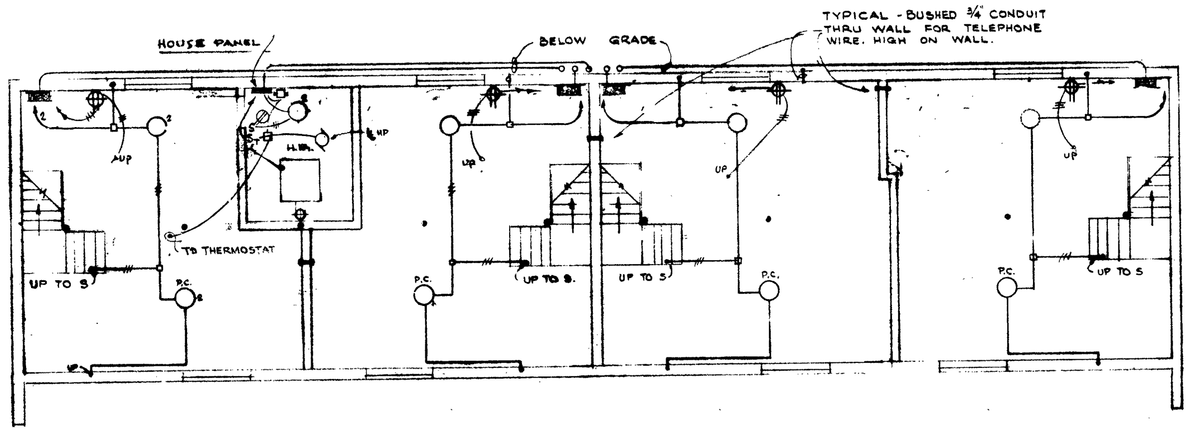

BASEMENT PLAN SCALE 1/8" = 1'-0"

3 BEDROOM UNIT

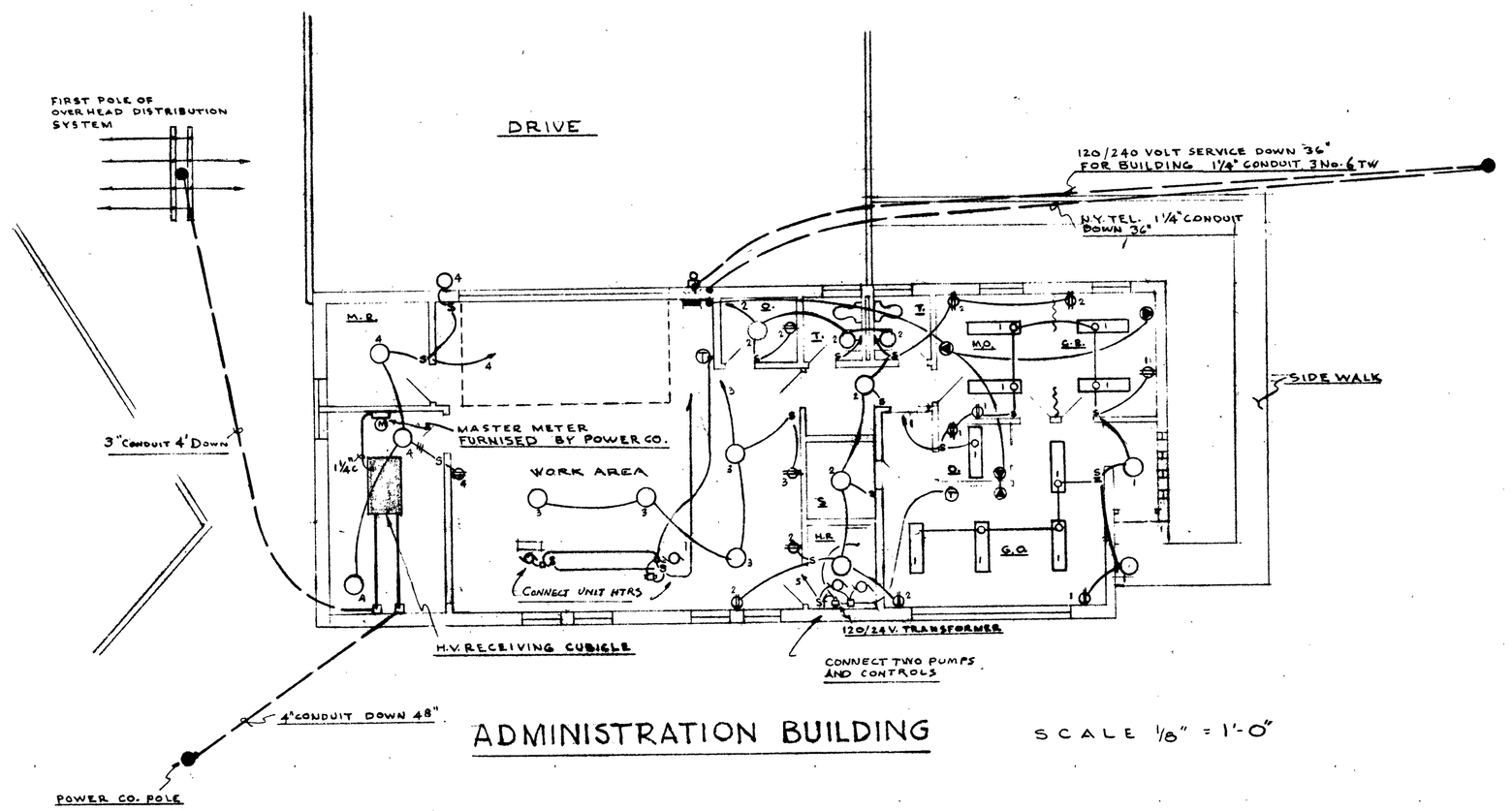

ADMINISTRATION BUILDING SCALE 1/8" = 1'-0"

NOTE
USE No. 12 WIRE THROUGHOUT OUT THIS BUILDING.

SYMBOL LIST	
	FLUORESCENT FIXTURE & OUTLET
	INCANDESCENT CEILING FIXTURE & OUTLET
	INCANDESCENT WALL MOUNTED FIXTURE & OUTLET.
	DUPLEX RECEPTACLE
	DUPLEX GND RECEPTACLE (REFRIG. OUTLET TO BE 1' 8" OFF CENTER, ALL K. & D.R. OUTLETS UP APPROX 3' 8")
	N.Y. TELEPHONE OUTLET & CONDUIT ADM. BLDG. ONLY
	STUB UP O AND STUB DOWN ●
	TRANSFORMER 120/24 MOUNT & CONNECT
	LIGHTING PANEL
	CONDUIT FOR N.Y. TEL.
	THERMOSTAT MOUNT & CONNECT
S	SINGLE POLE SWITCH
S^3	THREE WAY SWITCH
$S^{\#\#}$	GANG GROUPING OF SINGLE POLE SWITCHES
S_T	THERMAL SWITCH
P.C.	PULL CHAIN SWITCH
O.C.	OVER COUNTER
	MOTOR OUTLET
	OUTSIDE CHECK METER SOCKET
	SYMETRICAL YARD LT. -ASYMETRICAL YARD LIGHT

NOTE
1. USE RIGID CONDUIT FOR EXTERIOR & UNDERGROUND WORK
2. CIRCUITING AS SHOWN IS INTENDED TO INDICATE DESIRED GROUPS OF OUTLETS. INSTALL OVER CEILING OR UNDER FLOOR AS DESIRED. REFER TO SPECS FOR INSTALLATION REQUIREMENTS

I HEREBY CERTIFY THAT THESE PLANS FOR ALBERT AMATO, ELECTRICAL CONTRACTING CORP. ARE CORRECT TO THE BEST OF MY KNOWLEDGE

STATE OF NEW YORK · THOMAS R. RIBBIND · No. 37328 · LICENSED PROFESSIONAL ENGINEER

To home

MAY 31 1962

STATE OF NEW YORK · REAL JACOBUS · 26122 · LICENSED PROFESSIONAL ENGINEER

REGISTERED ARCHITECTS · UNIVERSITY OF THE STATE OF NEW YORK

R. R. FITZGERALD No. 6615
E. R. SHACKLETON No. 6697

D'&B' BLDGS., ADMIN. BLDG. ELECTRICAL

100 UNITS LOW RENT HOUSING
P.H.A. N.Y. 11-2 FOR THE
NIAGARA FALLS HOUSING AUTHORITY
NIAGARA FALLS, NEW YORK

SHACKLETON AND FITZGERALD, A.I.A.
ARCHITECTS
1513 LOCKPORT STREET
NIAGARA FALLS, N. Y.

THE CONTRACTOR SHALL VERIFY ALL DIMENSIONS AT SITE BEFORE STARTING WORK

SCALE: AS NOTED
JOB NO.: 58-147
DATE: 5-16-60
DWG. NO.: E-301